The World's *Oldest* Instrument Manufacturer

The factory as it looked in 1920.

I've long had a soft spot in my heart for Germany. My German grandfather emigrated to this country as a child in the late 1800s, his family possessing little more than the knowledge of raising Holstein cows and the strong work ethic, one of the hallmarks of their heritage. My mother was the youngest of his nine children. By the time my brothers and I were born, he was widowed from his Swedish wife of 37 years, retired from the grain elevator he operated in western Oklahoma, a man of few words, serious but kind.

Years later I completed the circle their journey had begun, returning to Germany courtesy the United States Army, settling for a time just east of Stuttgart in the town of Schwäbisch-Gmünd. As artillery surveyors we were "guardians of the guardians" so to speak, keeping in readiness mode Pershing missiles in the NATO chain of defense. (It goes without saying that as hungry boys we also took much delight in down-home German cooking when we could find it.) A steady appreciation for technology and precision was beginning

>> By Marc Cheves

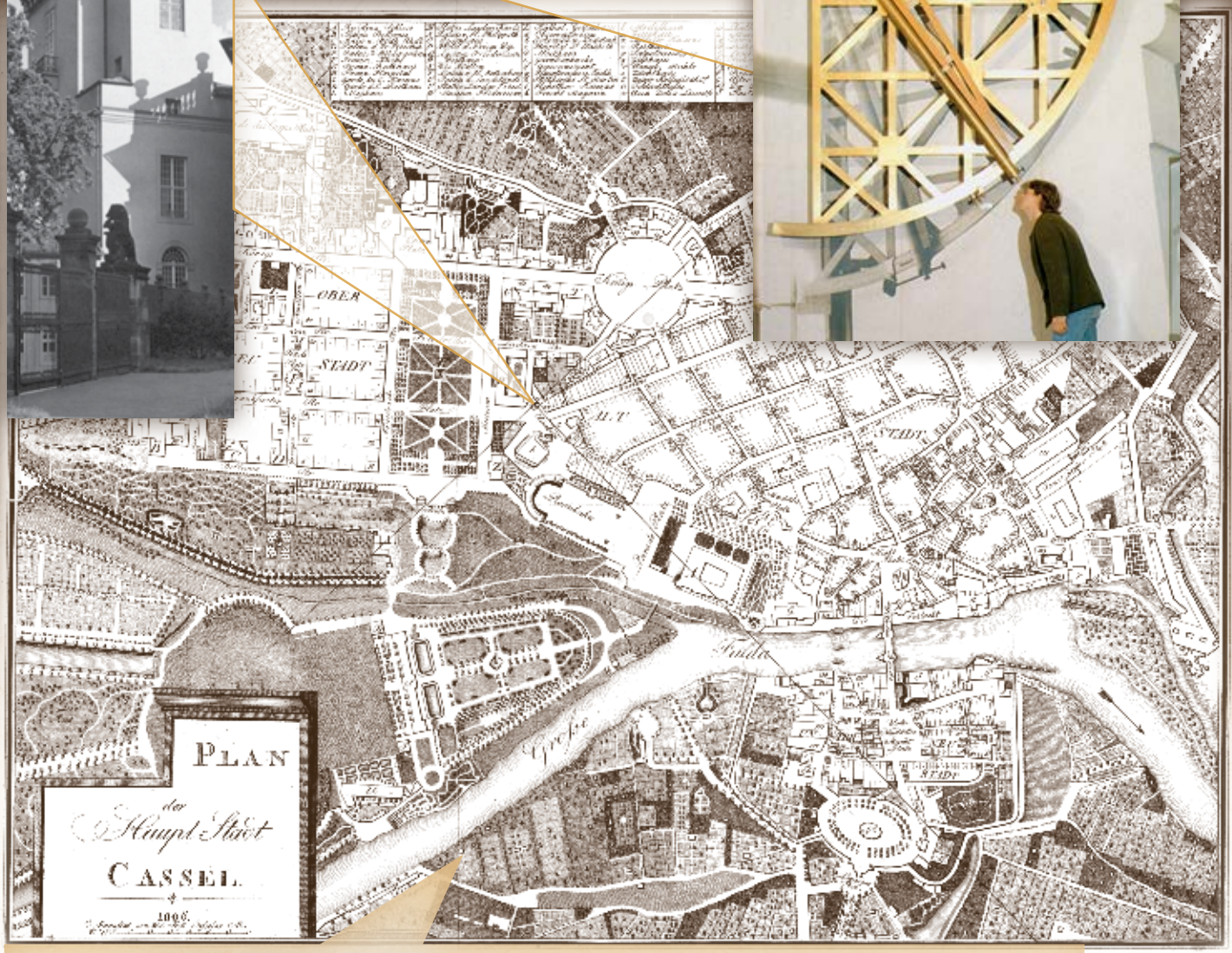

An 1806 plan of Kassel, at the time called Cassel after the Roman castellum for castle. The intersecting lines represent the coordinate system for Kassel. At the intersection stands the observatory (above, left), from which astronomic observations were made using the two-meter quadrant made by Breithaupt in 1786 (above right). Today, the quadrant is part of the permanent Astronomy and History of Science exhibit in the state museum in the Orangerie.

to take shape in a way that would one day have a major impact on my life and career.

Fifteen years ago I had the distinct pleasure of returning to Germany to visit the world's oldest instrument manufacturer, F.W. Breithaupt & Sohn, in the historic town of Kassel. Thus began a long friendship with Hans-Hellmut Breithaupt, 7th generation descendant of Johann Christian Breithaupt who founded the company in 1762.

At each consecutive Intergeo technical conference, our paths would again cross, and Hans-Helmut would share more with me about the company's progress. It is a rare pleasure these days to meet with someone of Breithaupt's stature and knowledge who, along with his dear wife Hedda, has a gift of hospitality that puts those from all walks of life at ease. F.W. Breithaupt & Sohn celebrated their 250th Anniversary in 2012, and we were honored when a formal invitation to attend the event arrived in the mail!

The theme of the 250th Anniversary was *genauer als haargenau*, meaning *more accurate than exactly*. When I toured the factory in 1998, Hans-Helmut demonstrated "precision" by measuring the thickness of a hair from my head. "Precise as a hair is not precise enough," he said. The thickness of an average human hair is 50-53 microns, but if equipment is

250 years, run by one family, located at one place, innovative in one product line, committed to one objective: precision.

Above: Part of the permanent Astronomy and History of Science exhibit in the state museum in Kassel. Note the Breithaupt 1786 two-meter quadrant on the back wall.

Below: Abuli Motiwala, a Breithaupt dealer from Malaysia, with the dividing engine made by Breithaupt in 1818.

not manufactured to submicron tolerances it won't be adequate because 53 microns of tolerance in a theodolite axis will cause an error of 1.5 meters in one kilometer.

Today, Breithaupt manufactures more than 100 instruments, many of which are for special applications. The theodolite group includes builder and surveyor models, a compass theodolite, an upside-down mining theodolite and a specialized pilot-balloon theodolite for tracking weather balloons. As in 1998, demand for these pilot-balloon theodolites still exists around the world.

Hans-Helmut's son, Dr. Hans-Friedrich Breithaupt, born in 1975, studied business administration at the Catholic university of Eichstätt-Ingolstadt and gained his PhD afterwards. After some time in research he worked as a consultant. In addition to his background in business administration background, he is also skilled in new instrument technology and IT. In response to a globalized world,

Older than America!

Eight generations of success has not come without hardship. Until the middle of the 20th century, the constant wars and conflicts that kept Europe embroiled made for fairly impossible odds in terms of establishing any type of long-term business. During World War II alone, 87 percent of Kassel was destroyed by Allied bombing. Fearing the raids, inhabitants fled to the countryside. The Breithaupt family was no exception, and everyone but Hans-Hellmut's father, Friedrich, left town in 1943. Twice the factory was destroyed, but the family returned in 1946 and lived in an undestroyed part of the factory for six years as they rebuilt the business. I am reminded of the passage in Kipling's poem, "If":

If you can dream—and not make dreams your master;
If you can think—and not make thoughts your aim;
If you can meet with triumph and disaster
And treat those two imposters just the same;
If you can bear to hear the truth you've spoken
Twisted by knaves to make a trap for fools,
Or watch the things you gave your life to broken,
And stoop and build 'em up with wornout tools;

If you can make one heap of all your winnings
And risk it on one turn of pitch-and-toss,
And lose, and start again at your beginnings
And never breathe a word about your loss;
If you can force your heart and nerve and sinew
To serve your turn long after they are gone,
And so hold on when there is nothing in you
Except the Will which says to them: "Hold on";

If you can talk with crowds and keep your virtue,
Or walk with kings—nor lose the common touch;
If neither foes nor loving friends can hurt you;
If all men count with you, but none too much;
If you can fill the unforgiving minute
With sixty seconds' worth of distance run—
Yours is the Earth and everything that's in it,
And—which is more—you'll be a Man my son!

Company founder Johann Christian Breithaupt, from a 1700s painting.

Above: The Breithaupt family today, showing the seventh and eight generation, and perhaps the ninth generation.

Below right: Persian surveying crew circa 1900.

Below left: Upside-down theodolite, for use in mines.

Hans-Hellmut began repositioning the company in 2006, the year Hans Friedrich came onboard, and the repositioning pace has increased. Today father and son own and manage the company as it continues special projects and serially-numbered instruments in a combination of precise machining, optics and electronics. Hans-Friedrich told us he has in mind at least a hundred new projects for the future. Such ideas, combined with skill and function, are key to Breithaupt's success, and according to Hans Friedrich, makes it easier to motivate and convince the staff of actively taking part in the further development of the company.

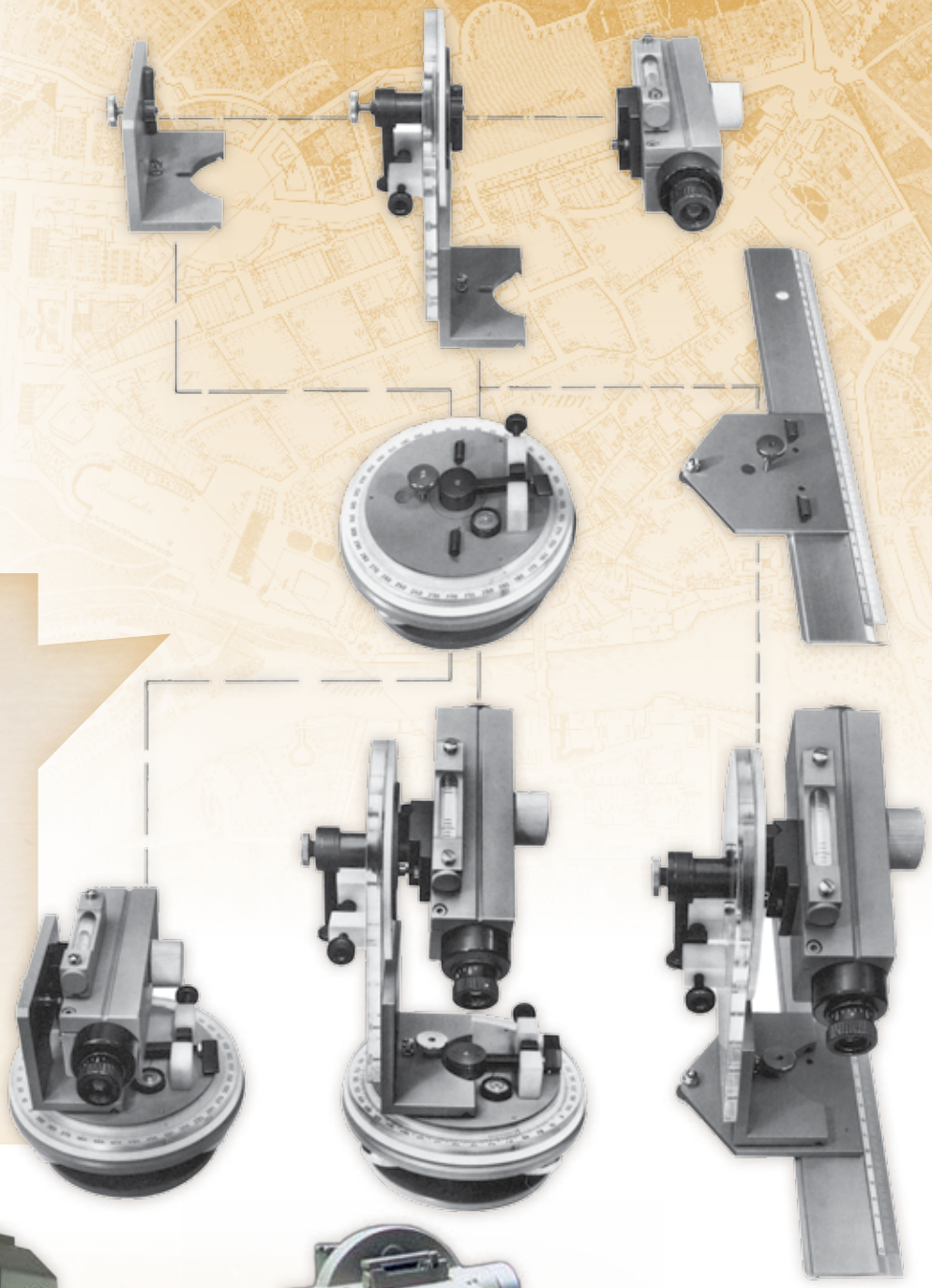

Right: An ingenious educational training set that includes a theodolite, level and alidade. Many of the parts are exposed to allow the student to see the workings. All of the pieces come apart and can be re-assembled into the various instruments. When I asked how it was designed to allow the student to keep everything precisely lined up when re-assembling, Hans Hellmut smiled and said, "That was the hard part!"

Below: The Winkelmesser (WMS) is the latest instrument manufactured by Breithaupt. The WMS, combined with a high speed camera, is used to generate 3D data of flying objects.

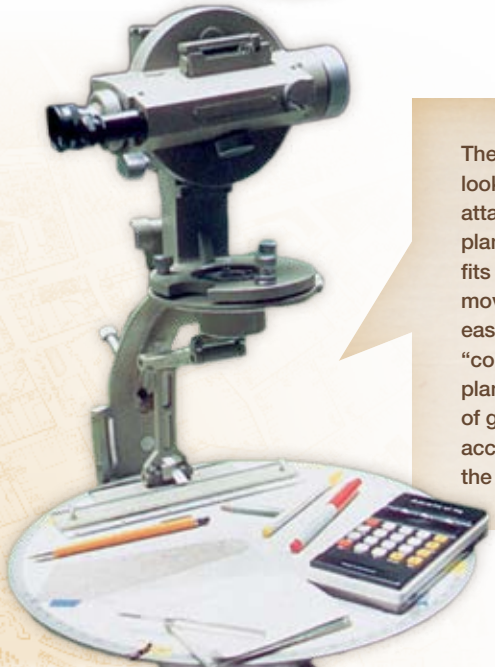

The MEJUN has a curious-looking bracket that attaches the alidade to the plane table. The bracket fits a shoulder and makes moving the instrument easier. The alidade is "connected" to the plane table via a series of gimbals that ensure accurate placement of the shot onto the map.

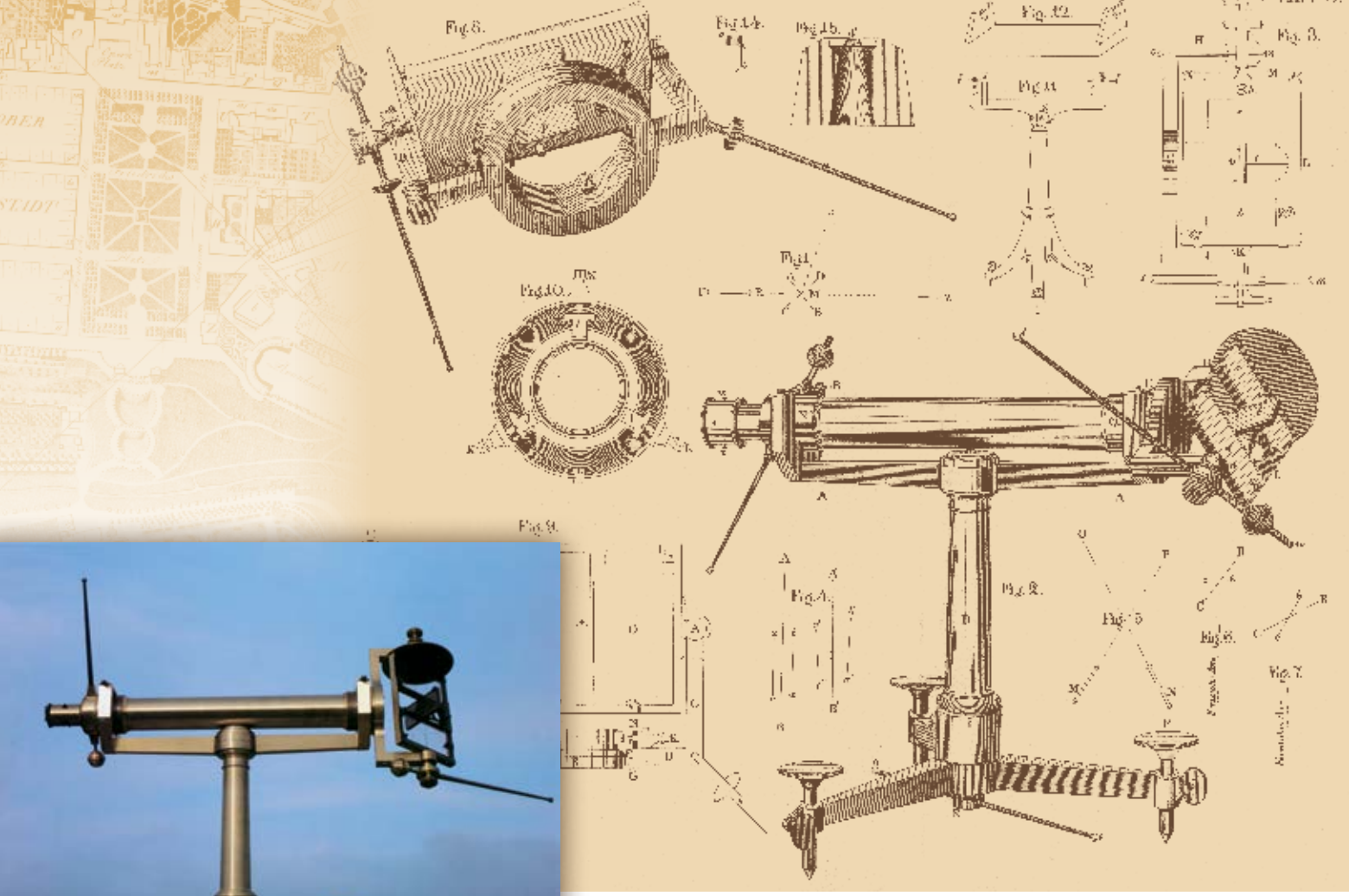

Above: A portion of a catalog print for a heliotrope. A similar instrument was made for Carl Friedrich Gauss in the 1830s. Gauss is the father of our least squares adjustment, without which GNSS positioning would not be possible.

Below: Shortly before its adoption of the European euro currency, the Federal Government of the German Republic issued a 10-mark banknote commemorating Gauss, the mathematical genius. Note Gauss bell curve.

From Hans-Friedrich we learned that a primary challenge for instrument makers today is the increasing pace of technological development and related shorter life cycles of products in a global market where competition is intense. Differences in production conditions and cost means that only those companies that are innovative, flexible and customer oriented will be able to cope and stay in the market.

As camera systems continue to replace the human eye, analysis and interpretation of picture data–as well as automatic system control based on this data–are part of Breithaupt's special precision measurement solutions. The combination of data derived from camera pictures and angle data is relevant

Left: Universalinstrument, circa 1920s, so named because it was a combination of height and azimuth measuring. This high precision instrument was originally used in observatories for deriving astronomic data but could also be used in the field for geodetic measurement purposes. In contrast to transits the reading was based not on vernier but on direct microscope reading. The instrument is set up in exact north-south direction. With the scope and the resulting angle data, positioning of stars can be determined by azimuth and height with a precision of far below 1 arc second. It has 250mm circles and two microscopes for each circle. The horizontal circle has a rough graduation for quick setting and a fine graduation for reading. The main scope has a magnification of 65 and there is an additional scope called "Versicherungsfernrohr" used to ensure that the instrument was not moved during measurement.

Above: A close-up, showing the fine craftmanship.

"Clocked Perspective"

by Anri Sala

Over the centuries, Kassel has played an important part in Germany's history. Located on the banks of the Fulda River in north-central Germany, Kassel was founded as a walled city and will celebrate its 1,100th anniversary this year. It has long enjoyed a reputation for culture and science. The first theater and museums were built in the mid-1700s, and a worldwide modern art exhibit is held in Kassel every five years. dOCUMENTA, running for 100 days, draws artists from all over the world. The 13th event ended just before our visit, and attracted more than 200 artists, and nearly a million visitors. A juried event, each artist's concept must be accepted and sponsored, and one of the artists chose Breithaupt as his sponsor. The artist had seen a painting (see image) in which the painter had inserted an actual clock. The clock did not fit with the perspective of the painting, so the artist came up with the idea of creating a large clock that could only be viewed from the side to keep the perspective correct. This resulted in distortion when viewed straight on, and to make it keep correct time, Breithaupt had to machine elliptical gears (see images). A large-budget event, much of the art is purchased for permanent display in Kassel. Unfortunately, the artist was asking too much for his piece and the clock was not purchased. Even so, because it was so unusual, it created and attracted a lot of attention.

According to Hans Friedrich, "Due to its form, this clock has to have some minutes running quicker than others in order to get the impression of the correct time from the far away perspective. So this clock is like life: some time is running quickly but there are hours which seem to last much longer. One of the reason we sponsored this piece of art is that the walk of life of the company is similar to what the artist intends to express." Currently the clock can be seen in London.

Top: The clock as installed for dOCUMENTA.

Middle: One of the elliptical gears manufactured by Breithaupt.

Left: The 1825 painting by G. Ulbricht, showing the rupture in the perspective caused by the placement of a real clock into the painting.

for a wide range of different measurement applications. Whether working with vehicle components or parts of production machines that have to be aligned in challenging environments with fluctuations in temperature, humidity, rain, vibration, shock, etc., Breithaupt offers solutions which, in addition to conventional digital pictures, also cover infrared or the integration of high speed cameras.

As a designer and manufacturer, Breithaupt has a built-in advantage for customizing products for special orders. Communication with customers is key. Generations of experience in the fields of machining, optics, together with mechatronical and optoelectronical elements, makes them well-positioned for decades to come, paving the way for the ninth generation.

Close-up of the rangefinder in the new Breithaupt exhibit.

Above: a 1770 rangefinder. The "baseline" is 97 centimeters in length, and at both ends are 28-centimeter semi-circles for turning the angles.

Left: A mining compass, designed to be suspended from a line. The gimbal action ensures that the compass is always level.

As I mentioned earlier, and as is true with most surveyors, the attraction to precision and finely crafted measuring equipment has long been in my blood. I left the factory with a profound sense of respect for the history of Breithaupt and their reputation as producers of high-quality, precision equipment. Many consider Breithaupt to be one of the finest machine shops in Europe. Today, Breithaupt instruments can be found in 140 countries around the globe, and more than 475,000 instruments have been made. When it comes to specialized instruments, and instruments that are built to last with little need for maintenance, F.W. Breithaupt & Sohn stands tall, and they smile at the future.

Hans Friedrich Breithaupt, the eighth generation, with his son Moritz, the possible ninth generation. They are looking at a clockworks, the mechanism for which uses a marble rolling once per second around a circular raceway.

For many more pictures of the Breithaupt factory and the 250th Anniversary Celebration, please see our flickr account on amerisurv.com.